Series 1 Double Rails*

FEATURES

- Two parallel, hardened and ground 12 mm diameter steel shafts, accuracy grade h6, hardened to RC 62 ± 2
- Parallelism and accurate center distances achieved by rails and ground spacers inserted into the extrusion at 50 mm centers
- Lightweight, high stiffness
- Hardened spacers RC 62 with 6.5 mm diameter hole to accommodate mounting screws
- 3 carriage options with easy assembly and low friction
- Weight is 3 kg/m

***** This ***isel*** Linear System is patented.

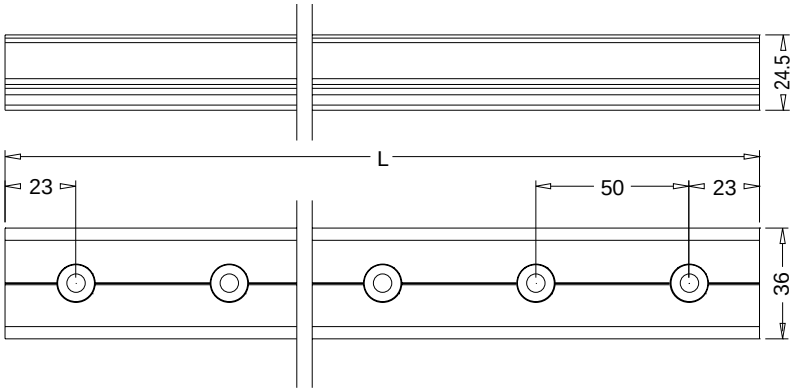

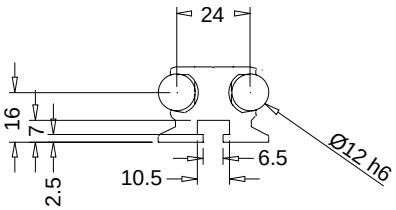

SERIES 1 DOUBLE RAIL

Catalog Number	Nominal Length (1) mm
HL4222M0010300	300
HL4222M0010400	400
HL4222M0010500	500
HL4222M0010600	600
HL4222M0010850	850
HL4222M0011000	1000
HL4222M0011100	1100

Catalog Number	Nominal Length (1) mm
HL4222M0011250	1250
HL4222M0011350	1350
HL4222M0011500	1500
HL4222M0011750	1750
HL4222M0012000	2000
HL4222M0012500	2500
HL4222M0013000	3000

(1) The actual length is 4 mm less than the nominal length

NOTE: STEEL SPACERS ARE NOT TO BE REMOVED

Techno Inc.

Series 1 Compatible Carriages

Series 1 Short Carriage*

FEATURES

- Two single bearings with machined bearing plate for mounted modular design
- Single-piece ground steel bearing core on each bearing
- 3.5 mm diameter steel balls
- Four independent recirculating ball bearing circuits per carriage
- Adjustable preload via two screws on carriage plate
- Replacement bearings available for each carriage

***** This ***isel*** Linear System is patented.

SERIES 1 SHORT CARRIAGE: HL46D0M223001

TABLE 1:
Maximum static and dynamic load capacity as a function of the angle A, of the applied force F.

Description	Maximum Load	
	Static	Dynamic
Short Carriage	D x 430 N	D x 400N

For value of "D" see chart on page 16 of the Technical Section.

TABLE 2:
Maximum permissible moment for carriages.

Carriage	Moment Nm					
	Static			Dynamic		
	M_X	M_Y	M_Z	M_X	M_Y	M_Z
Short	15	7	7	7.3	3.7	3.7

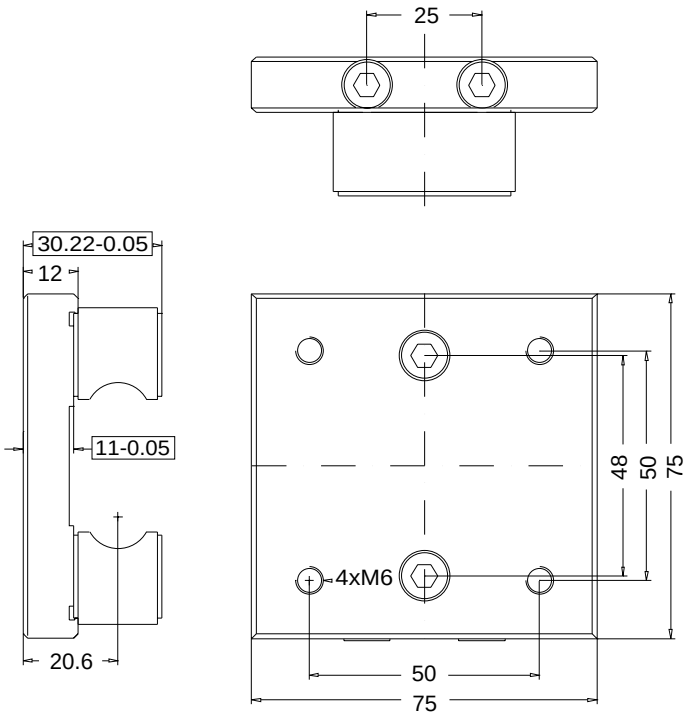

Series 1 Long Carriage*

FEATURES

- Two single bearings with machined bearing plate for mounted modular design
- Single-piece ground steel bearing core on each bearing
- 3.5 mm diameter steel balls
- Four independent recirculating ball bearing circuits per carriage
- Adjustable preload via two screws on carriage plate
- Replacement bearings available for each carriage

***** This ***isel*** Linear System is patented.

SERIES 1 LONG CARRIAGE: HL46D0M223002

TABLE 1:
Maximum static and dynamic load capacity as a function of the angle A, of the applied force F.

Description	Maximum Load	
	Static	Dynamic
Long Carriage	D x 1270 N	D x 750N

For value of "D" see chart on page 16 of the Technical Section.

TABLE 2:
Maximum permissible moment for carriages

Carriage	Moment Nm					
	Static			Dynamic		
	M_X	M_Y	M_Z	M_X	M_Y	M_Z
Long	44	25	25	22	12.6	12.6

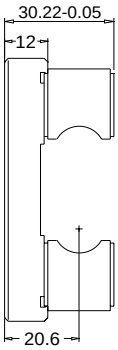

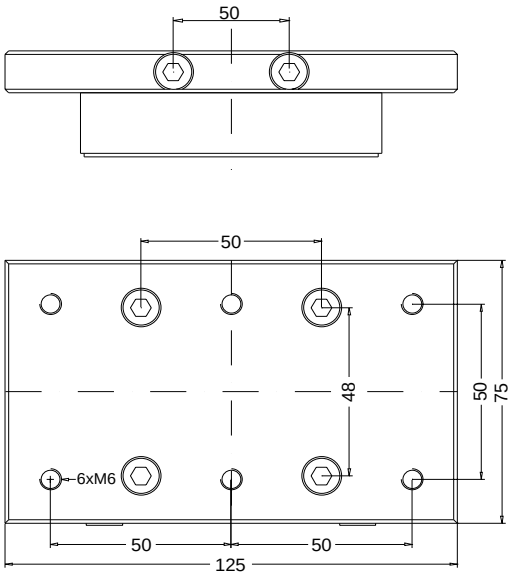

Techno Inc.

Series 1 Compatible Carriages

Roller Carriage 1*

FEATURES

- For use with Series I Double Rail
- Factory preloaded with two rollers that have eccentric mounting to allow for easy preload and clearance adjustment
- Four precision rollers, Ø31 mm on each plate. Each roller has two sealed bearings, lubricated for life, for minimal maintenance
- Consists of a ground and hardened steel plate 125 x 97 x 8 mm with four M6 threaded holes on a 50 mm grid for easy mounting
- Rollers are available separately for OEM applications, see page 47
- Travel at up to 10 m/sec, with ultraquiet operation

***** This ***isel*** Linear System is patented.

ROLLER CARRIAGE 1: HL46D0M223009

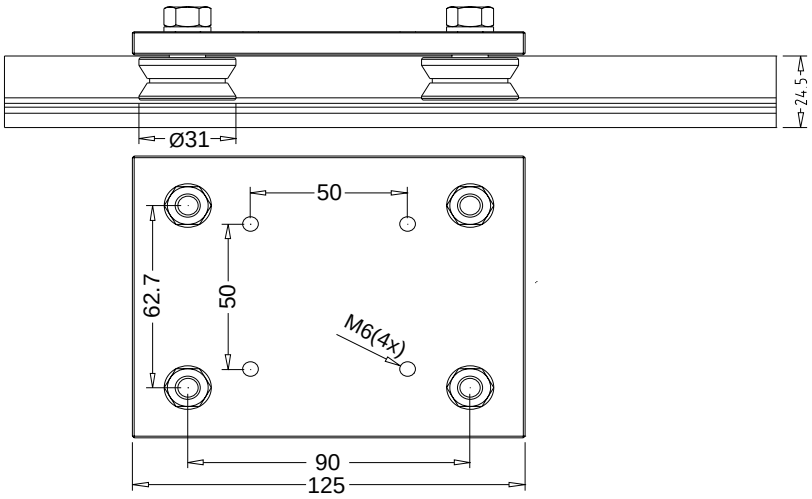

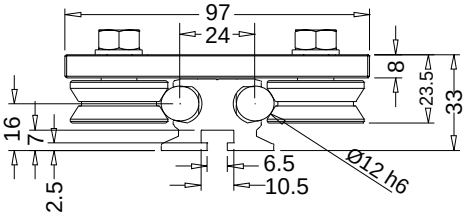

Maximum Load (N)

	F_z	F_y
Static	2800	2600
Dynamic	1400	1300

Maximum Moment (N·m)

	M_x	M_y	M_z
Static	90	125	65
Dynamic	45	60	32

For information on individual rollers, please see page 47

Series 1 Linear Bearings*

FEATURES

- Short bearing is replacement for short carriage; long bearing is replacement for long carriage
- 3.5 mm diameter steel balls
- Two independent recirculating ball bearing circuits per bearing
- Ideal for OEM applications
- Single-piece ground steel bearing core

***** This ***isel*** Linear System is patented.

SERIES 1 SHORT BEARING: HL4500M222001
(sold in set of 2)

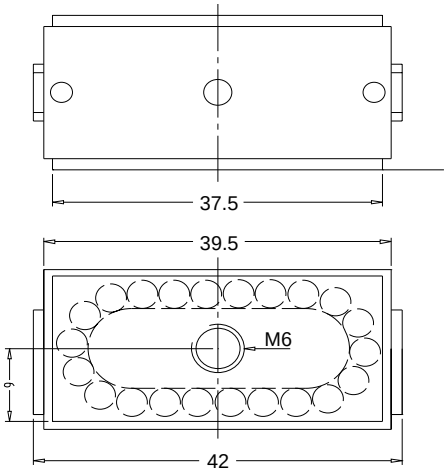

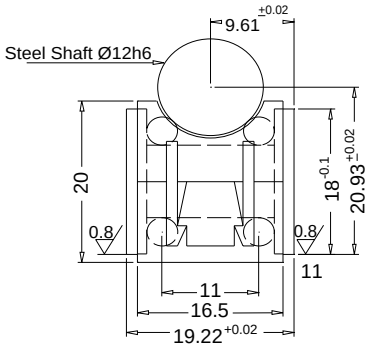

SERIES 1 LONG BEARING: HL4500M222002
(sold in set of 2)